Sky130nm tutorial

Carsten Wulff, carsten@wulff.no

Keywords: IP, xschem, ngspice, Corners, Layout, DRC, LVS, LPE, Documentation

Before you start the tutorial you need to have the tools installed.

If you're a student of mine, then you must install the tools locally on your PC. Read check The Tools chapter first.

If you're the impatient kind, then check https://analogicus.com/aicex/ which shows how to start the docker image.

Create the IP

I've made some scripts to automatically generate the IP.

To see what files are generated, see `tech_sky130A/cicconf/lelo.yaml`

```
cd aicex/ip
cicconf newip ex --project lelo --technology sky130A --ip  tech_sky130A/cicconf/lelo.yaml
```

The file structure

It matters how you name files, and store files. I would be surprised if you had a good method already, as such, I won't allow you to make your own folder structure and names for things. I also control the filenames and folder structure because there are many scripts to make your life easier (yes, really) that rely on an exact structure. Don't mess with it.

Github workflows

On github it's possible use something called workflows to run things every time you push a new version. It's really nice, since it can then check that your design is valid.

The workflows are defined below.

```
.github
   workflows
   docs.yaml # Generate a github page
   drc.yaml  # Run Design Rule Checks
   gds.yaml  # Generate a GDS file from layout
   lvs.yaml  # Run Layout Versus Schematic
             # and Layout Parasitic Extraction
```

Configuration files

Each IP has a few files that define the setup, you'll need to modify at least the `README.md` and the `info.yaml`.

```
 .gitignore  # files that are ignored by git
 README.md   # Frontpage documentation
 config.yaml # What libraries are used. Used by  cicconf
 info.yaml   # Setup names, authors etc
 media       # Where you should store images for documentation
 tech -> ../tech_sky130A  # The technology library
```

Design files

A "cell" in the open source EDA world should consist of the following files

- Schematic (.sch)
- Layout (.mag)
- Documentation (.md)

The files must have the same name, and must be stored in `design/<LIB>/` as shown below.

Note there are also two symbolic links to other libraries. These two libraries contain standard cells and standard analog transistors (ATR) that you should be using.

```
design
  LELO_EX_SKY130A
  LELO_EX.sch
  JNW_ATR_SKY130A -> ../../jnw_atr_sky130a/design/JNW_ATR_SKY130A
  JNW_TR_SKY130A -> ../../jnw_tr_sky130a/design/JNW_TR_SKY130A
```

For example, if the cell name was `LELO_EX`, then you would have

- `design/LELO_EX_SKY130A/LELO_EX.sch`: Schematic (xschem)
- `design/LELO_EX_SKY130A/LELO_EX.sym`: Symbol (xschem)
- `design/LELO_EX_SKY130A/LELO_EX.mag`: Layout (Magic)
- `design/LELO_EX_SKY130A/LELO_EX.md` : Markdown documentation (any text editor)

All these files are text files, so you can edit them in a text editor, but mostly you shouldn't (except for the Markdown)

Simulations

All simulations shall be stored in `sim`. Once you have a Schematic ready for simulation, then

```
cd sim
make cell CELL=LELO_EX
```

This will make a simulation folder for you. Repeat for all your cells.

```
sim
  Makefile
  cicsim.yaml -> ../tech/cicsim/cicsim.yaml
```

The work

All commands (except for simulation), shall be run in the `work` folder.

In the `work/` folder there are startup files for Xschem (xschemrc) and Magic (.magicrc). They tell the tools where to find the process design kit, symbols, etc. At some point you

probably need to learn those also, but I'd wait until you feel a bit more comfortable.

```
work
 .magicrc
 Makefile
 mos.24bit.dstyle -> ../tech/magic/mos.24bit.dstyle
 mos.24bit.std.cmap -> ../tech/magic/mos.24bit.std.cmap
 xschemrc
```

GITHUB SETUP

Create a repository on github. The name of the repository that you make on GitHub has to be the same as what is written after `<your username>` in the last command below. In this example, that is `lelo_ex_sky130a`.

```
cd lelo_ex_sky130a
git remote add origin \
 git@github.com:<your username>/lelo_ex_sky130a.git
```

START WORKING

Edit README.md

Open README.md in your favorite text editor and make necessary changes.

Familiarize yourself with the Makefile and make

I write all commands I do into a Makefile. There is nothing special with a Makefile, it's just what I choose to use 20 years ago. I'm not sure I'd choose something different now.

```
cd work
make
```

Take a look inside the file called Makefile.

DRAW SCHEMATIC

The block we'll make is a current mirror with a 1 to 4 scaling.

A schematic is how we describe the connectivity, and the types of devices in an analog circuit. The open source schematic editor we will use is XSchem.

Open the schematic:

```
xschem -b ../design/LELO_EX_SKY130A/LELO_EX.sch &
```

Add Ports

Add IBPS_5U and IBNS_20U ports, the P and N in the name signifies what transistor the current comes from. So IBPS must go into a diode connected NMOS, and N will be our output, and go into a diode connected PMOS somewhere else.

Add transistors

Use 'I' or 'Shift+i' (note the letter case) to open the library manager. Click the `lelo_ex_sky130A/design` path, then `JNW_ATR_SKY130A` and select `JNWATR_NCH_4C5F0.sym`

The naming convention for these transistors is `<number of contacts on drain/source>C<times minimum gate length>F`, so the number before the C is the width, and the number before/after the F is the length. The absolute size does not matter for now. Just think "4C5F0 is a 4 contact wide long transistor", while a "4C1F2 is a 4 contact wide, short transistor".

Select the transistor and press 'c' to copy it, while dragging, press 'shift-f' to flip the transistor so our current mirror looks nice. 'shift-r' rotates the transistor, but we don't want that now.

Place two transistors for the output transistor, as shown in the figure below.

Press ESC to deselect everything

Select the input transistor, and change the name to 'xo1'

Select the first output transistor, and change the name to 'xo0[1:0]'. Using bus notation on the name will create 2 transistors.

Select the second output transistor and give it the name 'xo2[1:0]'.

Select ports, and use 'm' to move the ports close to the transistors.

Press 'w' to route wires.

Use 'shift-z' and z, to zoom in and out

Use 'f' to zoom full screen

Remember to save the schematic

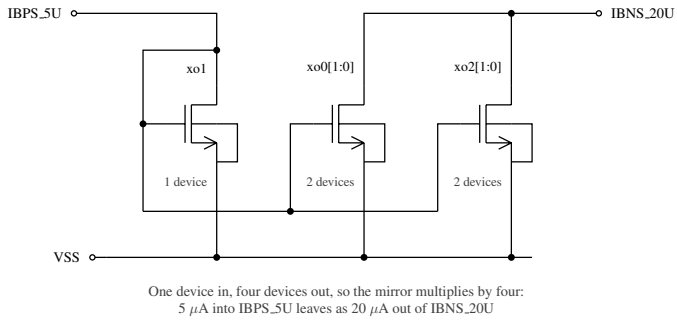

Figure 1: The finished LELO_EX schematic - one diode connected input instance and two output instances of two devices each, between the IBPS_5U, IBNS_20U and VSS ports. Four output devices to one input device is where the 5 uA in and 20 uA out of the port names comes from. The devices are the JNWATR_NCH_4C5F0 symbol itself, converted from the library you are placing them from, so the page and the canvas cannot drift apart

Netlist schematic

Check that the netlist looks OK

In work/

```
make xsch CELL=LELO_EX
cat xsch/LELO_EX.spice
```

TYPICAL CORNER SPICE SIMULATION

I've made cicsim that I use to run simulations (ngspice) and extract results

Setup simulation environment

Navigate to the `lelo_ex_sky130a/sim/` directory.

Make a new simulation folder

```
cicsim simcell  LELO_EX_SKY130A LELO_EX \
    ../tech/cicsim/cell_spice/template.yaml
```

I would recommend you have a look at the template.yaml file to understand what happens.

Familiarize yourself with the simulation folder

I've added quite a few options to cicsim, and it might be confusing. For reference, these are what the files are used for

File	Description
Makefile	Simulation commands
cicsim.yaml	Setup for cicsim
summary.yaml	Generate a README with simulation results
tran.meas	Measurement to be done after simulation
tran.py	Optional python script to run for each simulation
tran.spi	Transient testbench
tran.yaml	What measurements to summarize

The default setup should run, so

```
cd LELO_EX
make typical
```

Modify default testbench (tran.spi)

Delete the VDD source

Add a current source of 5uA, and a voltage source of 1V to IBNS_20U

```
IBP 0 IBPS_5U dc 5u
V0  IBNS_20U 0 dc 1
```

Save the current in V0 by adding i(V0) to the save statement in the testbench

Save the voltage by adding v(IBPS_5U) to the save statement

```
.save i(V0) v(IBPS_5U)
```

Modify measurements (tran.meas)

Add measurement of the current and VGS. It must be added between the "MEAS_START" and "MEAS_END" lines.

```
let ibn = -i(v0)
meas tran ibns_20u find ibn at=5n
meas tran vgs_m1 find v(ibps_5u) at=5n
```

Run simulation

```
make typical
```

and check that the output looks okish.

Try to run the simulation again

```
make typical
```

If everything works, then the simulation now should **not** be run. Every time cicsim runs (provided the `sha: True` option is set in `cicsim.yaml`) cicsim will compute a SHA hash of all files (stored in output_tran/*.sha*) that is referenced in the `tran.spi`. Next time cicsim is run, it checks the hash's and does not re-run if there is no need (no files changed).

Sometimes you want to force running, and you can do that by

```
make typical OPT="--no-sha"
```

Often, it's the measurement that I get wrong, so instead of rerunning simulation every time I've added a "–no-run" option to cicsim. For example

```
make typical OPT="--no-run"
```

will skip the simulation, and rerun only the measurement. This is why you should split the testbench and the measurement. Simulations can run for days, but measurement takes seconds.

Modify result specification (tran.yaml)

Add the result specifications, for example

```
ibn:
  src:
    - ibns_20u
  name: Output current
  min: -5%
  typ: 20
  max: 5%
  scale: 1e6
  digits: 3
  unit: uA

vgs:
  src:
    - vgs_m1
  name: Gate-Source voltage
  typ: 0.6
  min: 0.3
  max: 0.8
  scale: 1
  digits: 3
  unit: V
```

Re-run the measurement and result generation

```
make typical OPT="--no-run"
```

Open `results/tran_Sch_typical.html`

Check waveforms

You can either use ngspice, or you can use cicsim, or you can use something I don't know about

Open the raw file with

```
cicsim wave output_tran/tran_SchGtKttTtVt.raw
```

Load the results, and try to look at the plots. There might not be that much interesting happening
Searching waveforms: On the left side of the window you'll see a text box in the middle between the filename, and the wave names. This is a regex search field, and you can easily search for waveforms (like `i(v0)`) that you want to find.

Note that the search field uses regular expressions. If you don't know regex, then it's time to learn. I always use the perl regular expression variants.

For example, searching for "i(v0)" won't actually show anything, because the `()` are special characters. "i(v0)" will find it though.

I could search for both ibps and v0 at the same time with `ibps|i\(`, so it's well worth learning.

A great resource is Mastering Regular Expressions

ALL CORNERS SPICE SIMULATIONS

Analog circuits must be simulated for all physical conditions, we call them corners. We must check high and low temperature, high and low voltage, all process corners, and device-to-device mismatch.

Remove Vh and Vl corners (Makefile)

For the current mirror we don't need to vary voltage, since we don't have a VDD.

Open Makefile in your favorite text editor.

Change all instances of "Vt,Vl,Vh" and "Vl,Vh" to Vt

Run all corners

To simulate all corners do

```
make typical etc mc
```

where etc is extreme test condition and mc is monte-carlo.

Wait for simulations to complete.

Get creative with python

Open `tran.py` in your favorite editor, try to read and understand it.

The `name` parameter is the corner currently running, for example `tran_SchGtAmcttTtVt`.

The measured outputs from ngspice will be added to `tran_SchGtAmcttTtVt.yaml`

Delete the "return" line.

Add the following lines (they automatically plot the current and gate voltage)

```
import cicsim as cs
fname = name +".png"
print(f"Saving {fname}")
cs.rawplot(name + ".raw","time","v(ibps_5u),i(v0)" \
  ,ptype="",fname=fname)
```

Re-run measurements to check the python code

```
make typical etc mc OPT="--no-run"
```

You'll see that cicsim writes all the png's. Check with `ls -l output_tran/*.png`.

You'll also notice it will slow down the simulation, so maybe remove the lines from `tran.py` again ;-)

Generate simulation summary

Run

```
make summary
```

Install pandoc if you don't have it

Run

```
pandoc -s   README.md -o README.html
```

to generate a HTML slideshow that you can open in browser. Open the HTML file.

Viewing results without GUI browser

If you're on a system without a browser, or indeed a GUI, then it's possible to view the results in the terminal.

Check if `lynx` is installed, if it's not installed, then

On linux

```
sudo apt-get install lynx
```

On Mac

```
brew install lynx
```

Then

```
lynx README.html
```

Think about the results

From the corner and mismatch simulation, we can observe a few things.

- The typical value is not 20 uA. This is likely because we have a M2 VDS of 1 V, which is not the same as the VDS of M1. As such, the current will not be the same.
- The statistics from 30 corners show that when we add or subtract 3 standard deviation from the mean, the resulting current is outside our specification of +- 5 %.

DRAW LAYOUT

A foundry (the factory that makes integrated circuits) needs to know how we want them to create our circuit. So we need to provide them with a "layout", the recipe, or instruction, for how to make the circuit. Although the layout contains the same components as the schematic, the layout contains the physical locations, and how to actually instruct the foundry on how to make the transistors we want.

Open Magic VLSI

```
cd work
magic ../design/LELO_EX_SKY130A/LELO_EX.mag
```

Now brace yourself, Magic VLSI was created in the 1980's. For its time it was extremely modern, however, today it seems dated. However, it is free, so we use it.

Magic VLSI

Try google for most questions, and there are youtube videos that give an intro.

- Magic Tutorial 1
- Magic Tutorial 2
- Magic Tutorial 3
- Magic command reference
- Magic Documentation

Default magic start with the BOX tool. Mouse left-click to select bottom corner, left-click to select top corner.

Press "space" to select another tool (WIRING, NETLIST, PICK).

Type "macro help" in the command window to see all shortcuts

Hotkey	Function
v	View all
shift-z	zoom out
z	zoom in
x	look inside box (expand)
shift-x	don't look inside box (unexpand)
u	undo
d	delete
s	select
Shift-Up	Move cell up
Shift-Down	Move cell down
Shift-Left	Move cell left
Shift-Right	Move cell right

Add transistors

Open Cell -> Place Instance. Navigate to the right transistor.

Place it. Hover over the transistor and select it with 's'. Now comes a bit of tedious thing. Select again, and copy. It's possible to align the transistors on-top of eachother, but it's a bit finicky.

Place all transistors on top of each other as shown below in the picture.

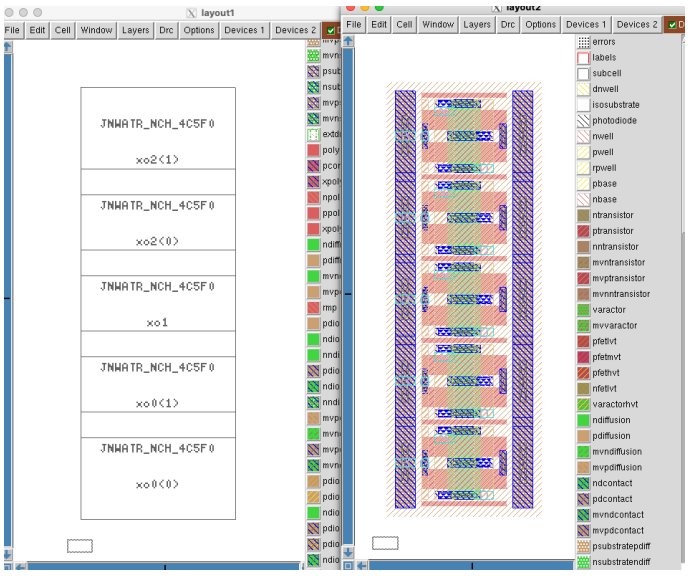

Figure 2: Magic with the transistor instances stacked on top of each other, shown as boxes on the left and with layers drawn on the right

Place devices

You will find that one of the more time consuming things with analog layout is to place the devices, and to follow the design rules from foundry. I detest tedious work. As such, I've tried for the past 25 years to simplify analog layout. I've not finished yet, but maybe you'll find some of the scripts useful.

Note that the command below will override all your hard work ;-)

```
cd work
make xsch
cicpy sch2mag LELO_EX_SKY130A LELO_EX
```

Add Ground

In the command window, type

```
see no *
see viali
see locali
see m1
see via1
see m2
```

Make a box around the layout by left clicking bottom left, and right clicking top right. Press 'x' to expand.

Change grid to 1 um. Set "Window->Snap to grid on"

Select a 1 um box below the transistors and paint the rectangle with locali (middle click on locali)

Change to the 'wire tool' with spacebar. Set "Window-> Snap to grid off"

Connect guard rings to ground.

Press the top transistor 'S' and draw all the way down to connect all of the transistors' source terminals. Use 'shift-right click' to change layer down

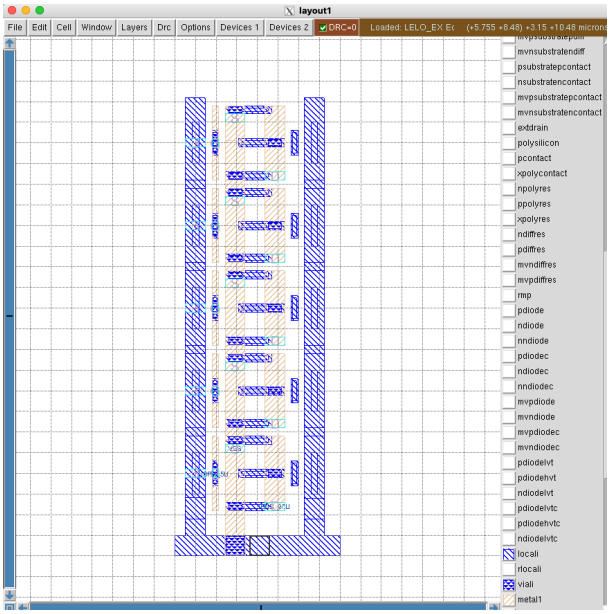

Figure 3: The source terminals of all transistors connected down to the ground rail, DRC clean

Route Gates

Press "space" to enter wire mode. Left click on the top gate to start a wire, and right click to end the wire.

The drain of M1 transistor needs a connection from gate to drain. We do that for the middle transistor. Change to the box tool (spacebar a few times). Create a box that matches the locali. Connect the drain to the gate in locali.

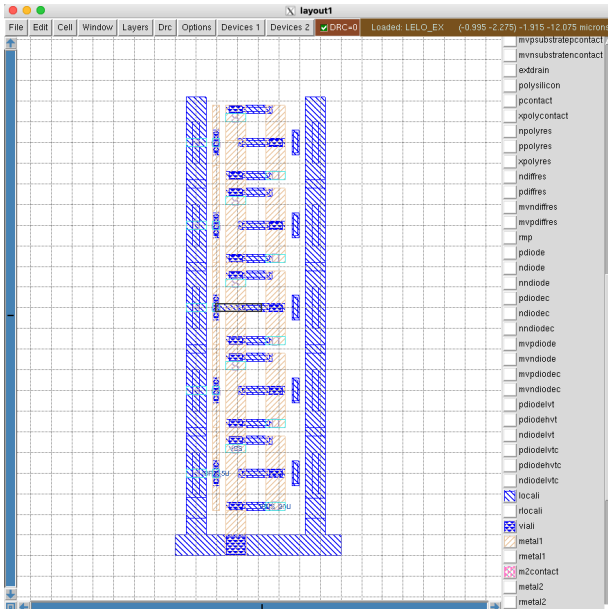

Figure 4: The gates routed together, with the gate to drain connection of M1 made in locali

Drain of M2

Use the wire tool to draw connections for the drains.

To add vias you can do "shift-left click" to move up a metal, and "shift-right click" to go down.

It's a very good idea to have direction rules for metal layers. I would recommend that you route metal1 vertical, metal2 horizontal, metal3 vertical etc. For locali it's usually all over the place.

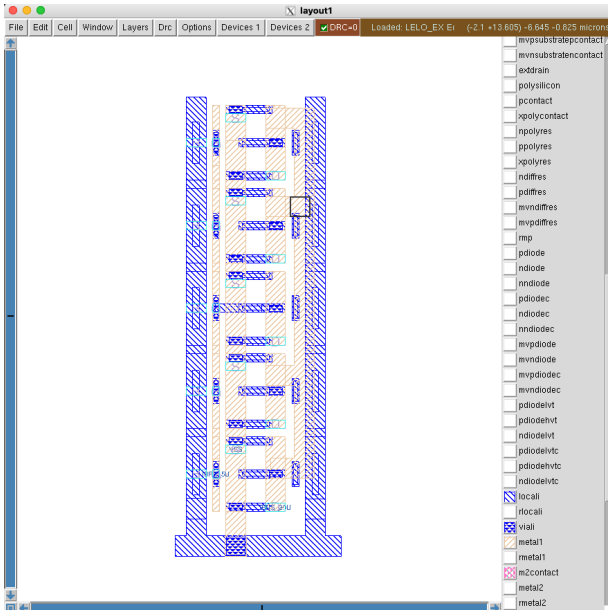

Figure 5: The drain connections routed with the wire tool, using vias to change metal layer

Add labels

All ports must be named (IBPS_5U, IBNS_20U, VSS). The cicpy script may add ports, but not necessarily where you want them.

Select a box on a metal, and use "Edit->Text" to add labels for the ports. Select the port button.

Layout verification

The DRC can be seen directly in Magic VLSI as you draw.

To check layout versus schematic navigate to work/ and do

```
make cdl lvs
```

Remember to save the layout first.

If you've routed correctly, then the LVS should be correct.

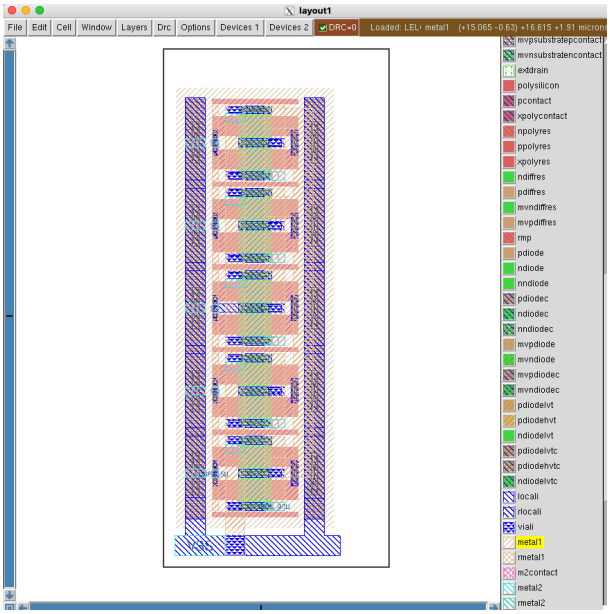

Figure 6: The completed LELO_EX layout with labelled ports, ready for the LVS check against the schematic

Extract layout parasitics

With the layout complete, we can extract parasitic capacitance.

```
make lpe
```

Check the generated netlist

```
cat lpe/LELO_EX_lpe.spi
```

Simulate with layout parasitics

Navigate to sim/LELO_EX. We now want to simulate the layout.

The default `tran.spi` should already have support for that.

Open the Makefile, and change

```
VIEW=Sch
```

to

```
VIEW=Lay
```

Typical simuation

Run

```
make typical
```

Corners

Navigate to sim/LELO_EX. Run all corners again

```
make all
```

Simulation summary

Open `summary.yaml` and add the layout files.

```
  - name: Lay_typ
    src: results/tran_Lay_typical
    method: typical
  - name: Lay_etc
    src: results/tran_Lay_etc
    method: minmax
  - name: Lay_3std
    src: results/tran_Lay_mc
    method: 3std
```

Run summary again

```
make summary
pandoc -s  README.md -o README.html
```

Open the README.html and have a look a the results. The layout should be close to the schematic simulation.

MAKE DOCUMENTATION

Make a file (or it may exists) `design/LELO_EX_SKY130A/LELO_EX.md` and add some documentation of what you've made.

Add the simulation results to your git repository to keep track

```
git add sim/LELO_EX/results/*.html
git add sim/LELO_EX/README.md
```

EDIT INFO.YAML

Finally, let's setup the `info.yaml` so that all the github workflows run correctly.

Mine will look like this.

You need to setup the url (probably something like `<your username>.github.io`) to what is correct for you.

I've added the doc section such that the workflows will generate the docs.

The sim is to run a typical simulation.

```
library: LELO_EX_SKY130A
cell: LELO_EX
author: Carsten Wulff
github: wulffern
tagline: The answer is 42
email: carsten@wulff.no
url: wulffern.github.io
doc:
  libraries:
    LELO_EX_SKY130A:
      - LELO_EX
```

SETUP GITHUB PAGES

Go to your GitHub repository (repo). Press Settings. Press Pages. Choose source under Build and Deployment -> GitHub Actions

Wait for the workflows to build. And check your github pages. Mine is https://wulffern.github.io/lelo_ex0_sky130a/.

FREQUENTLY ASKED QUESTIONS

Q: My GDS/LVS/DRC action fails, even though it works locally.

Sometimes the reference to the transistors in the magic file might be wrong. Open the .mag file in a text editor and check. The correct way is

```
use JNWATR_NCH_4C5F0  JNWATR_NCH_4C5F0_0 ../LELO_ATR_SKY130A
```

It's the last `../LELO_ATR_SKY130A` that sometimes is missing.

SUMMARY

The one-page version of this chapter:

- One cell end to end: schematic in xschem, a symbol, a testbench, and a cicsim run with a results table
- The names are not cosmetic: instances, ports and directories follow the aicex conventions the tools expect
- By the end you have run corners from one command - the pattern every later week repeats

Carsten Wulff received the M.Sc. and Ph.D. degrees in electrical engineering from the Department of Electronics and Telecommunication, Norwegian University of Science and Technology (NTNU), in 2002 and 2008, respectively. During his Ph.D. work at NTNU, he worked on open-loop sigma-delta modulators and analog-to-digital converters in nanoscale CMOS technologies. In 2006-2007, he was a Visiting Researcher with the Department of Electrical and Computer Engineering, University of Toronto, Toronto, ON, Canada. Since 2008 he's been with Nordic Semiconductor in various roles, from analog designer, to Wireless Group Manager, to currently Principle IC Scientist. From 2014-2017 he did a part time Post.Doc focusing on compiled, ultra low power, SAR ADCs in nanoscale technologies. He's also an Adjunct Associate Professor at NTNU. His present research interests includes analog and mixed-signal CMOS design, design of high-efficiency analog-to-digital converters and low-power wireless transceivers. He is the developer of Custom IC Compiler, a general purpose integrated circuit compiler, and makes the occational video on analog integrated circuits at https://www.youtube.com/@analogicus. For full CV see https://analogicus.com/markdown-cv/.